SIERRA PACIFIC WINDOWS	8000 Vinyl Premium Double Slider 59 1/2" x 47 1/2" Overall Unit Frame Size Nail Fin Installation / Non-Impact		
CCL Listing #448-H-001.22-.25	QCT Test Report #: **QCT22-6558.08**		
8000 Vinyl Premium Series Double Slider - Operating Nail Fin Installation / WDMA Instructions / Non-Impact			
SHEET: 1 OF 2	FL41870	UPDATED: 8/01/2022	DRAWN BY: B.K.

TEST REPORT SUMMARY:

- MAXIMUM OVERALL FRAME SIZE: **59 1/2"(1511mm) x 47 1/2"(1207mm)**
- OVERALL DESIGN PRESSURE: **±45.1 psf**
- STRUCTURAL TEST PRESSURE: **±67.6 psf**
- RATING: **R-PG45**

FRAME ANCHOR INSTALLATION NOTES:

1. USE 2" X _ WOOD BUCK.
2. PLACE WOOD SHIMS EVERY 6-10".
3. 1/4" MAXIMUM SHIM SPACE AT HEAD, SILL AND EACH JAMB.
4. APPLY A CONTINUOUS BEAD OF SEALANT BETWEEN THE NAIL FIN AND THE BUCK AT THE HEAD, SILL AND SIDE JAMBS TO SECURE NAILING FLANGE TO FRAMING MATERIAL.
5. INSTALL #8 X 1-1/4" PPH SCREWS SPACED MAXIMUM 2" FROM EACH CORNER AND MAXIMUM 8" ON CENTER THEREAFTER, THROUGH THE INTEGRAL NAIL FIN INTO THE WOOD BUCK FRAMING MATERIAL, AT HEAD, SILL AND SIDE JAMBS. MINIMUM FASTENER EMBEDMENT OF 1" INTO FRAMING MATERIAL. 3/8" MINIMUM EDGE DISTANCE. SILICONE SEAL OVER SCREW HEADS

GENERAL INSTALLATION NOTES:

- Check rough opening for proper size, plumb, level and square.
- Make all necessary adjustments to ensure rough opening is plumb, level & square.
- Sill must be flat, level and capable of supporting the weight of the unit.
- Opening must allow a maximum of 1/4" shim space at head, sill and jambs.
- Wood buck, framing, fasteners, sealant and all wall system materials are provided by others

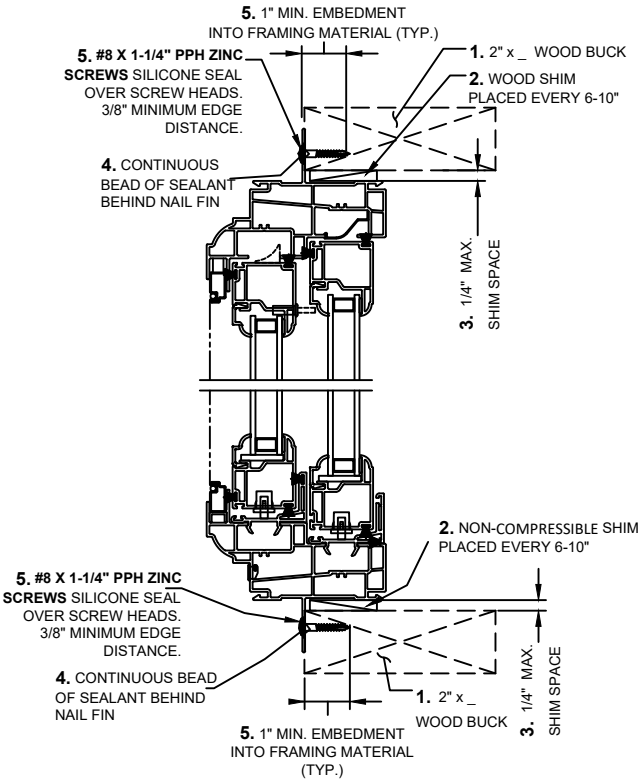

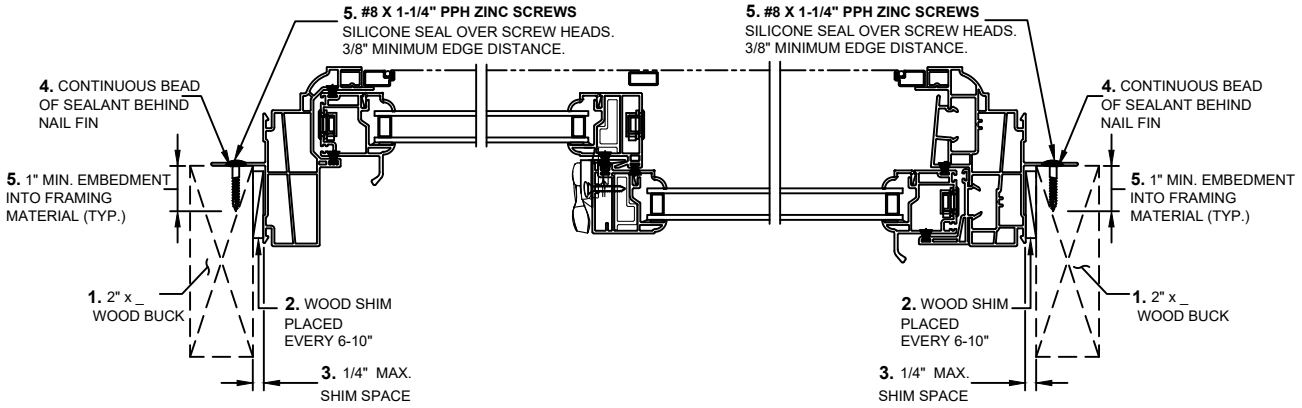

Installation requirements may vary in particular locations and in other types of construction. Proper installation is essential, and Sierra Pacific Windows, recommends consultation with an AAMA Certified Installer, or other qualified, registered building professional before installation of any Sierra Pacific product. Proper installation of Sierra Pacific products is the responsibility of the installer. Sierra Pacific is not responsible for proper installation. Sierra Pacific is not responsible for the design of, conditions in, or performance of building construction beyond the perimeters of the Sierra Pacific units. Sierra Pacific is not responsible for proper integration of the Sierra Pacific units with the weather-repellent systems of the building.

SIERRA PACIFIC WINDOWS

8000 Vinyl Premium Double Slider
59 1/2" x 47 1/2" Overall Unit Frame Size
Nail Fin Installation / Non-Impact

CCL Listing #448-H-003.22-.25	QCT Test Report #: **QCT22-6558.08**

8000 Vinyl Premium Series Double Slider - Operating
Nail Fin Installation / WDMA Instructions / Non-Impact

SHEET: 2 OF 2		UPDATED: 8/01/2022	DRAWN BY: B.K.

TEST REPORT SUMMARY:

- MAXIMUM OVERALL FRAME SIZE: **59 1/2"(1511mm) x 47 1/2"(1207mm)**
- OVERALL DESIGN PRESSURE: **±45.1 psf**
- STRUCTURAL TEST PRESSURE: **±67.6 psf**
- RATING: **R-PG45**

ELEVATION SHOWING
FASTENER LOCATION & SPACING
(TYP.)

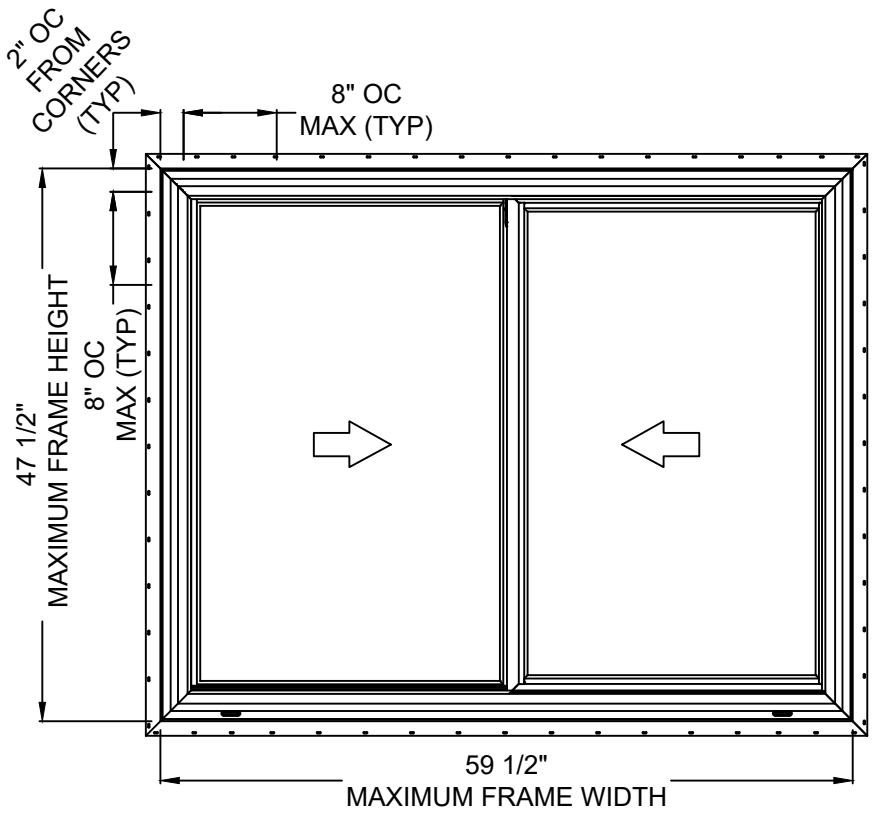

Installation requirements may vary in particular locations and in other types of construction. Proper installation is essential, and Sierra Pacific Windows, recommends consultation with an AAMA Certified Installer, or other qualified, registered building professional before installation of any Sierra Pacific product. Proper installation of Sierra Pacific products is the responsibility of the installer. Sierra Pacific is not responsible for proper installation. Sierra Pacific is not responsible for the design of, conditions in, or performance of building construction beyond the perimeters of the Sierra Pacific units. Sierra Pacific is not responsible for proper integration of the Sierra Pacific units with the weather-repellent systems of the building.